REFRIGERATED DRINKING TROUGH

The more stars the more water efficient
WATER RATING
www.waterrating.gov.au
2.0 litres per minute
In accordance with AS/NZS 6400
Licence No. 0140
Galvin Engineering Pty Ltd

WELS REG # T30734
Bubbler: TW-D15P-SS

WaterMark
AS/NZS 3718
Lic. WMKA0034

AS-1428
COMPLIANT

Scan QR code to view online

features and benefits

- Fully encased refrigeration unit
- Supplied fully pre-plumbed
- Bacteria and sunlight resistant bubblers with rubber compound mouth-guards to protect teeth
- Standard and disabled access stations
- 50mm waste supplied
- Radius internal corners - easy cleaning
- Radius external corners - added safety
- Mains powered refrigeration unit
- Ideal for schools and community centres

about

The *BRITEX Refrigerated Drinking Trough* is particularly suited to education projects. A proprietary refrigeration unit with automated thermostat is fully self contained underneath and plumbing connections are concealed. All units are supplied pre-plumbed with water efficient push button drink bubblers with bacteria and sunlight resistant rubber compound mouth pieces for additional safety in the event users are bumped whilst drinking. Fully welded, rounded corners both internally and externally ensure easy cleaning and provide added safety in high traffic areas. Disabled compliant drinking stations can be supplied at either the left or right hand end.

Additional technical literature for this product can be downloaded from the Britex website.

sample spec. text

BRITEX Refrigerated Pattern No.6 Drinking Trough - 2000L x 500W. Complete with self-contained proprietary refrigeration unit, 4 pre-plumbed push button bubblers with safety rubber mouth pieces. 150mm high splash back to rear. Left/Right hand end to be AS1428 compliant - Product Code TP6R

*RED TEXT may denote a variable where one option only is to be selected, a nominal dimension that needs to be specified, or an optional feature that can be removed if not required. Please refer to the back of this page for additional specification details and options.

VISIT **BRITEX.COM.AU** TO DOWNLOAD BIM FILES, CAD DRAWINGS AND THE MOST CURRENT PRODUCT LITERATURE.

BRITEX *innovating since 1938*

MELBOURNE
Britex Place, Mirra Crt
Bundoora VIC 3083
t (03) 9466 9000
f (03) 9466 9044

SYDNEY
16 Northumberland Drv
Taren Point NSW 2229
t (02) 9531 2100
f (02) 9531 2800

PERTH
Unit 1/8 Principal Link
Malaga WA 6090
t (08) 9249 5464
f (08) 9248 6893

BRISBANE
19 Manilla St
East Brisbane QLD 4169
t (07) 3363 2400
f (07) 3363 2444

ADELAIDE
The Britex Group
SA State Office
t 1300 764 744
f 1300 784 306

britex.com.au | info@britex.com.au | **A.B.N** 83 004 309 737

REFRIGERATED DRINKING TROUGH

PRODUCT CODE

TP6R

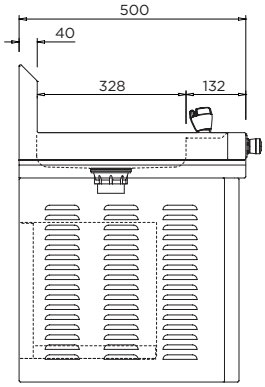

Refrigeration Unit Specs:

- *½" M&F BSP connection (supplied)*
- *Stop valve with ½ Female BSP required (not supplied)*
- *Recommended fitting of dual action filter (not supplied)*
- *1.5 metre 3 pin plug (supplied)*
- *Min. working pressure = 200kPa*
- *Max. working pressure = 800kPa*
- *Water Temp: Factory set to 3°C*

MODEL TP6R Side Elevation

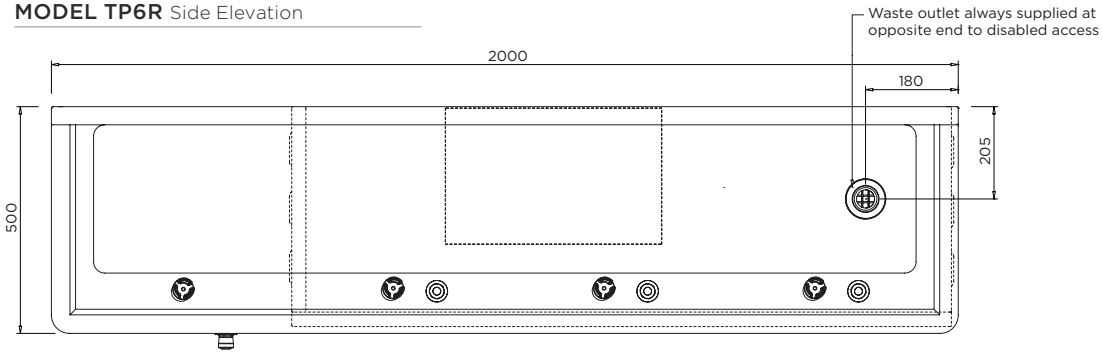

MODEL TP6R Plan

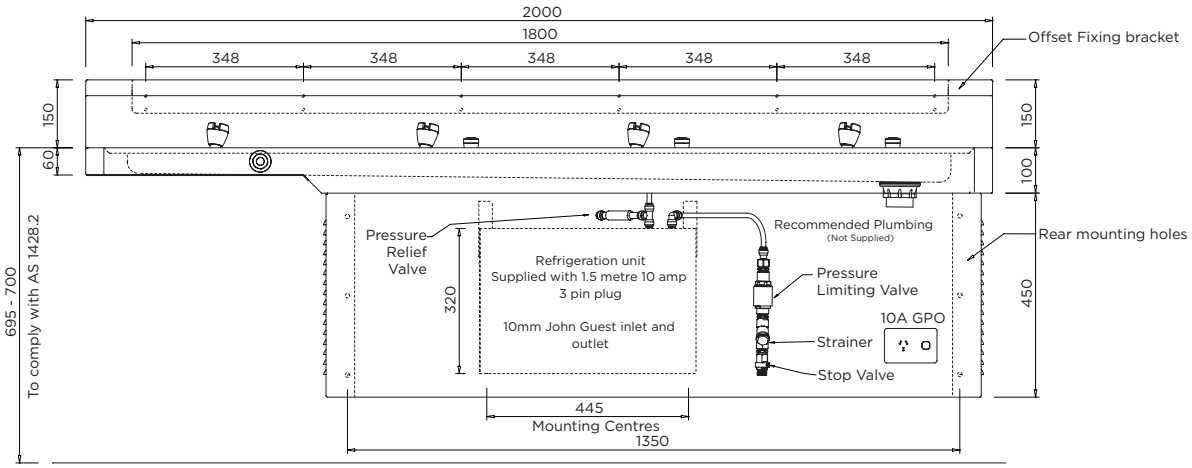

Additional technical literature for this product can be downloaded from the Britex website.

MODEL TP6R Front Elevation

specifying guide

When specifying this product please include:

- Product **Name** and **Code**
- Product **Dimensions**
- **Disabled access** (left or right)

options

- Custom lengths - consult Britex
- Disabled access (left or right)

VISIT **BRITEX.COM.AU** TO DOWNLOAD BIM FILES, CAD DRAWINGS AND THE MOST CURRENT PRODUCT LITERATURE.

Last Revised June 2017