CENTURION SLOPHOPPER

WELS REG#
P Trap: L06728 | S Trap: L06729

WaterMark
AS1172 Lic. WM022054
BRITEX: FC, FG, FF, FTS, FSAR
4.5L - 6L - 9L

features and benefits

- WELS and WaterMark certified
- Easy to install, one piece construction
- Available in 'P' or 'S' trap
- Rear or top water entry
- Unique blockage resistant trap
- Left and right access panels
- Hygienic, one piece pressed bowl
- Heavy gauge 1.5mm, type 304 S.S.
- 4.5/3 litre flushing compatible
- S.S. hinged bucket grate
- Concealed fixings
- Ideally suited to hospitals, medical centres and aged care facilities

about

The *BRITEX Centurion Stainless Steel Slophopper* is designed to hygienically dispose of waste in medical facilities. A unique, one piece pressed bowl provides water efficient flushing (4.5 / 3ltr) and ensures the highest standard of hygiene is maintained by reducing the risk of contamination. Both rear and top entry flushing requirements can be accommodated and a hinged bucket grate is supplied as standard. WaterMark and WELS certified as required by plumbing regulations, government legislation and to provide quality assurance.

sample spec. text

BRITEX S.S. Centurion Slophopper - S/P Trap. Top/Rear water entry. Complete with safety radius front fascia, hinged bucket grate, 4.5/3L flush capacity, fully shrouded to rear wall and 2 x access panels. 4 WELS rating and WaterMark certified - Product Code CSHXX*

*RED TEXT may denote a variable where one option only is to be selected, a nominal dimension that needs to be specified, or an optional feature that can be removed if not required. Please refer to the back of this page for additional specification details and options.

VISIT **BRITEX.COM.AU** TO DOWNLOAD BIM FILES, CAD DRAWINGS AND THE MOST CURRENT PRODUCT LITERATURE.

BRITEX innovating since 1938

MELBOURNE
Britex Place, Mirra Crt
Bundoora VIC 3083
t (03) 9466 9000
f (03) 9466 9044

SYDNEY
16 Northumberland Drv
Taren Point NSW 2229
t (02) 9531 2100
f (02) 9531 2800

PERTH
Unit 1/8 Principal Link
Malaga WA 6090
t (08) 9249 5464
f (08) 9248 6893

BRISBANE
19 Manilla St
East Brisbane QLD 4169
t (07) 3363 2400
f (07) 3363 2444

ADELAIDE
The Britex Group
SA State Office
t 1300 764 744
f 1300 784 306

britex.com.au | sales@britex.com.au | **A.B.N** 83 004 309 737

CENTURION SLOPHOPPER

PRODUCT CODE

CSHPR P Trap, Rear Entry

CSHSR S Trap, Rear Entry

CSHPT P Trap, Top Entry

CSHST S Trap, Top Entry

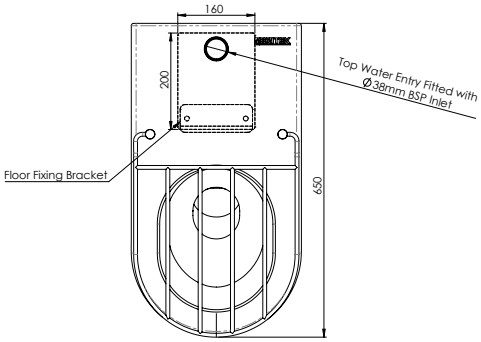

MODEL CSHP / CSHS Plan

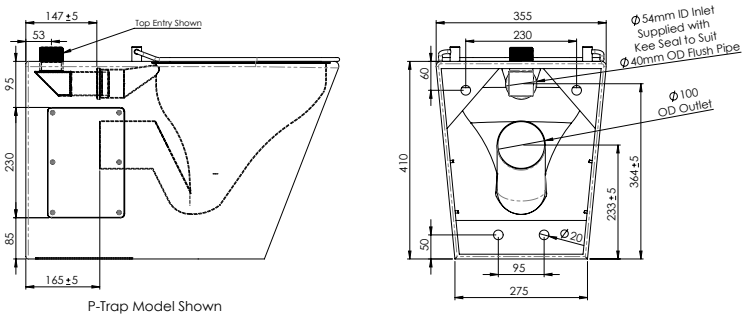

MODEL CSHP (P Trap Model) Section and Rear Elevation

Suggested Tapware:

TW-STS
Slophopper Trigger Spray

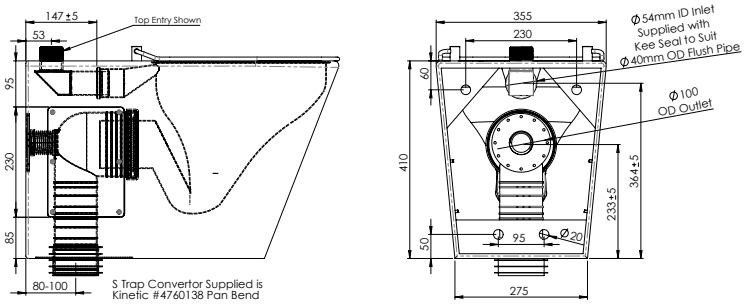

MODEL CSHS (S Trap Model) Section and Rear Elevation

specifying guide

When specifying this product please include:

- Product **Name** and **Code**
- Product **Dimensions**
- **S** or **P Trap**
- **Top** or **Rear** Entry

options

- Britex Flushing Device
- Top or rear water entry
- P or S trap

VISIT **BRITEX.COM.AU** TO DOWNLOAD BIM FILES, CAD DRAWINGS AND THE MOST CURRENT PRODUCT LITERATURE.

Last Revised Nov 2022 | Revision C

Due to ongoing research and our commitment to product development, details are subject to change without notice.
Details accurate at time of print.
Please refer to britex.com.au for the most current product information.
Allow +/- 5mm tolerance for dimensions and setouts shown in product literature.

britex.com.au | sales@britex.com.au | A.B.N 83 004 309 737

Certified System Quality ISO 9001